SOLA RACKS

Installation manual

Canopy mounting system

Version 2.0 , as of: 2018/10/15

BE SUPPORTED

Dear customer,

Congratulations, thank you for choosing a Solaracks product.
Experience for yourself the quality and reliability of the Canopy mounting system.

To simplify the installation and commissioning of your Canopy mounting system, we have included these detailed installation instructions. They are intended to help you to become familiar with how to fit the frame and the modules quickly.

Please read these instructions carefully before starting the installation. In case of any questions, please get in touch with your Solaracks contact who will be pleased to help.

Sunny greetings
Your Solaracks team

Contents

General information, standards and regulations

Canopy ground mounting system is an economical multi-purpose design. Providing shade for parking and solar power generation, it can be tailored for most module types, orientations, and inclinations. Long span between foundations is good for two cars parking width. Canopy effectively use existing land, streamlined design making it ideal to present environment -al friendly image or work as electrical vehicle charging station.

The number of components varies according to the size of the system.

Important information:
Your Canopy mounting system is supplied completely with all accessories.

Before you begin, please check that all parts are included using the packing list and bill of materials. Electrical work must be carried out by qualified electricians only.

Comply with the processing guidelines and – in individual cases – specific guidelines from local construction acts and the safety laws.

Condition for the 12-year guarantee to be granted: this applies with the use of Solaracks components only. No guarantee claims can be accepted if third-party components are used.

Handling and Installing Solaracks

It is critically important that safety practices are observed when installing
Do not throw or roughly handle any Solaracks components.
Do not bring Solaracks system into contact with sharp or heavy objects.
Do not modify Solaracks components in any way. The exchange of bolts, drilling of holes, bending or any other physical changes not described in standard installation procedure will void the warranty.
It is the installer's responsibility to verify the integrity of the structure to which Solaracks components is fixed. Roofs or structures with rotten/rusted bearers, undersized bearers, excessively spaced bearers, or any other unsuitable substructure cannot be used with Solaracks components, and installation on such structures will void the warranty, and could result in death or serious injury.

Please ensure that installation work takes account of the actual conditions at the installation site and is in accordance with the generally recognized engineering standards. Local regulations must be complied with. Please observe all regulations and guidelines under public law during planning, erection, operation and maintenance of PV plants connected to grids.

CAUTION: INSTALLATION OF THIS PRODUCT IS TO BE PERFORMED ONLY BY PROFESSIONALLY TRAINED INSTALLERS. ANY ATTEMPT BY AN UNQUALIFIED PERSON TO INSTALL THIS PRODUCT COULD RESULT IN DEATH OR SERIOUS INJURY.

Tool list

Tape measure

Drill bit: check hardware to determine drill bit size

Chalk line

Torque wrench

Permanent marker

Wrench and/or socket for all bolted connections

Inclinometer

Rubber mallet for installation of end caps

Carpenter’s square

Ratchet and/or rechargeable power drill

Pliers

System components

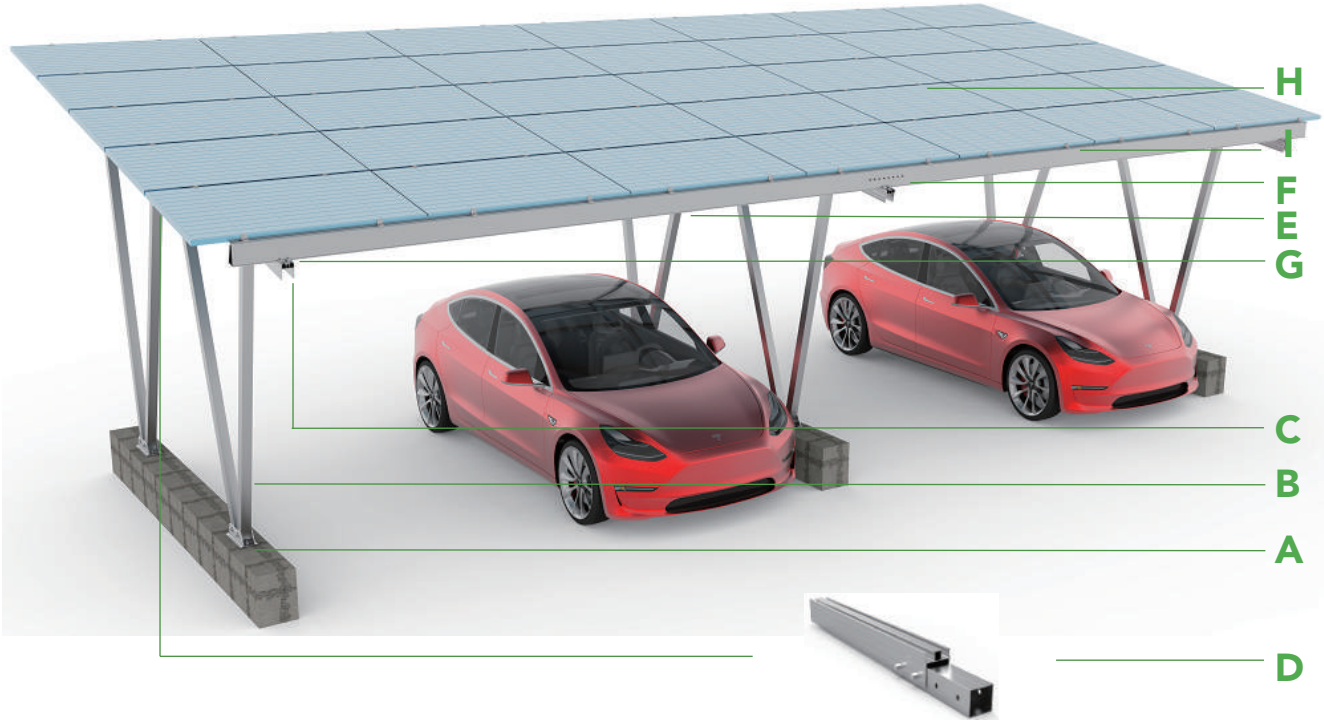

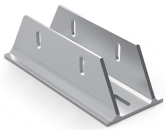

A : Foot

E : Rail

H : Inter clamp

B : Pole

F : Rail splice

I : End clamp

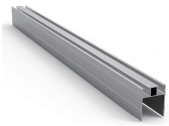

C : Supporting Beam

G : Rail clamp

D : Beam connector

Installation instruction

1. Mark the location

Measure the footprint of the array according to the installer's design and site plan.
Find the edges of the array according to provided design.
Mark location of concrete, once locations has been set, verify all angles are square.

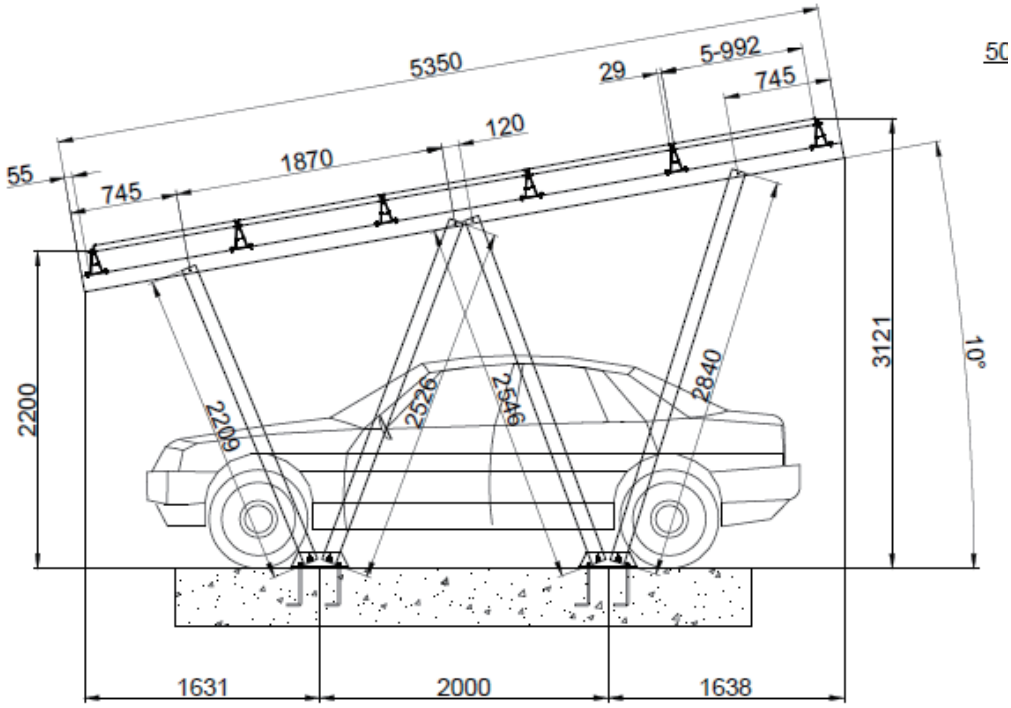

Section view

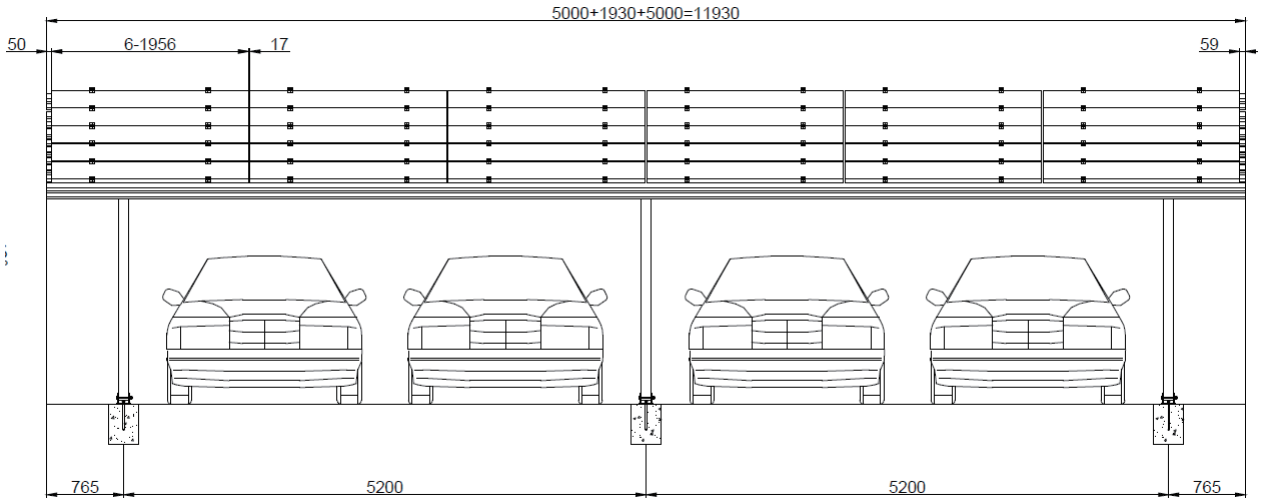

Front view

2. Placement of foundation

Excavate for foundations
Customer side prepare concrete foundations with pre-bury J bolt, distance between bolt is 120mm as below.

To ensure smooth mounting of the canopy, the anchors must be aligned in one row.
The permitted tolerance is ±5 mm

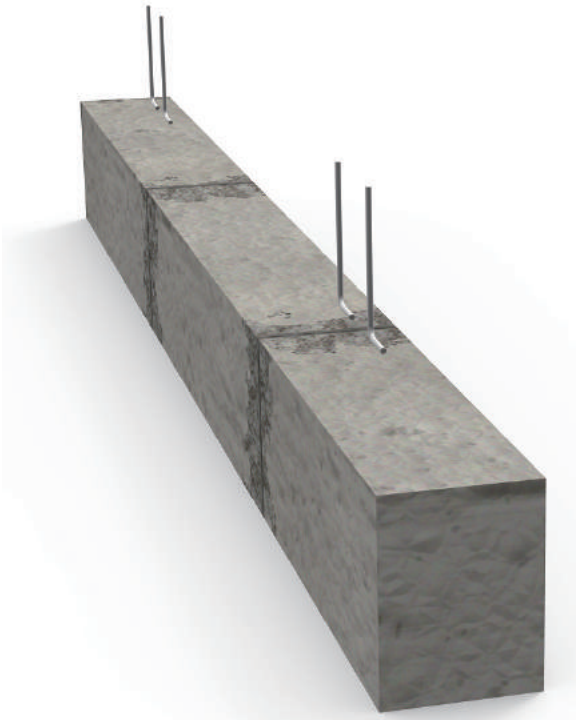

Distance between foundation is to design.

3. Assemble legs and beams

Insert legs into foot, fix using M12*150 bolts and nuts provided with package.

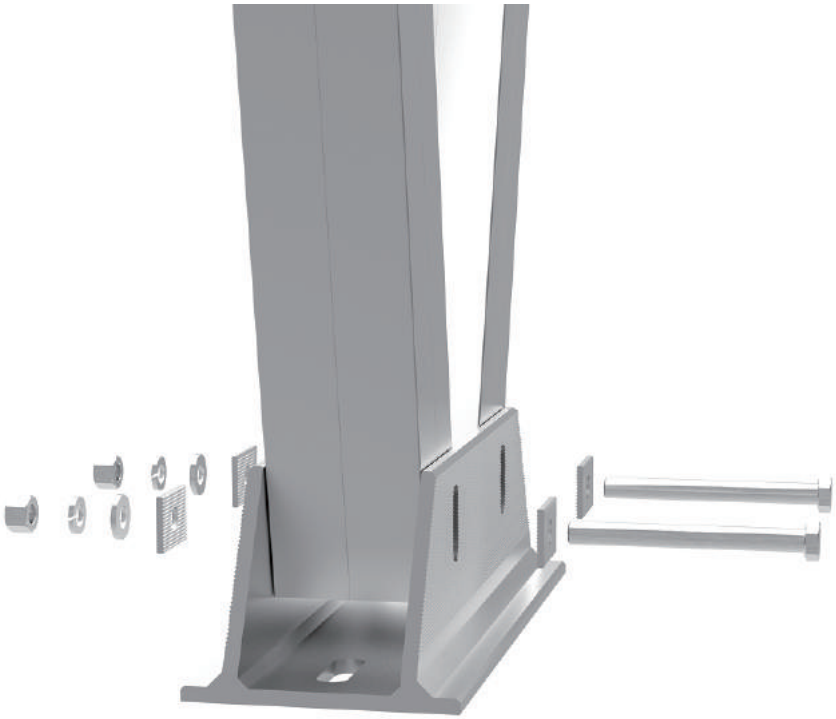

Connect legs with beam on top, usinh M12*130 bolts and nuts provided

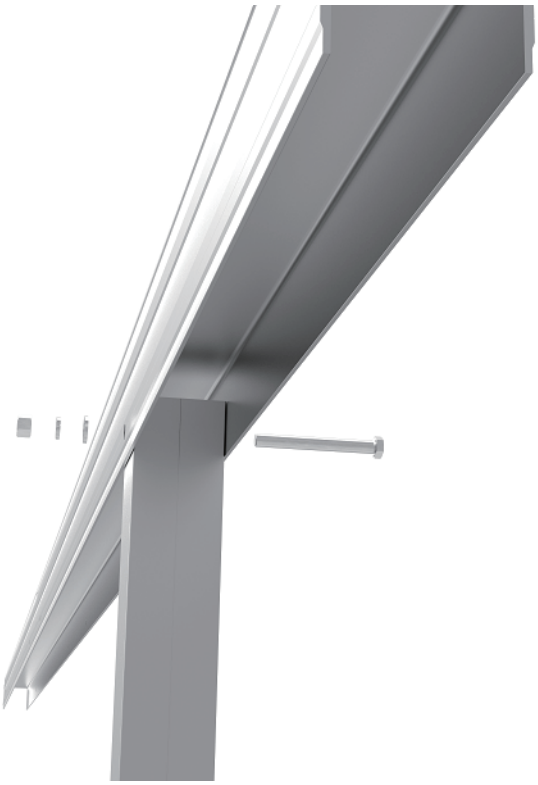

4. Install the assembly support

Position the legs, beam, and foot group, connect the foot with pre-bury bolt on concrete.

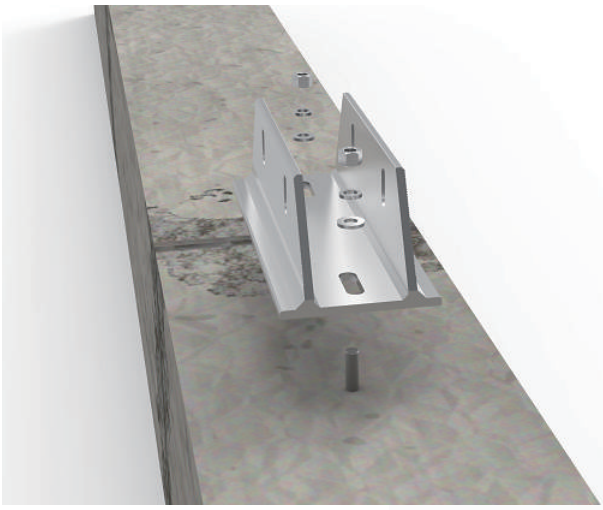

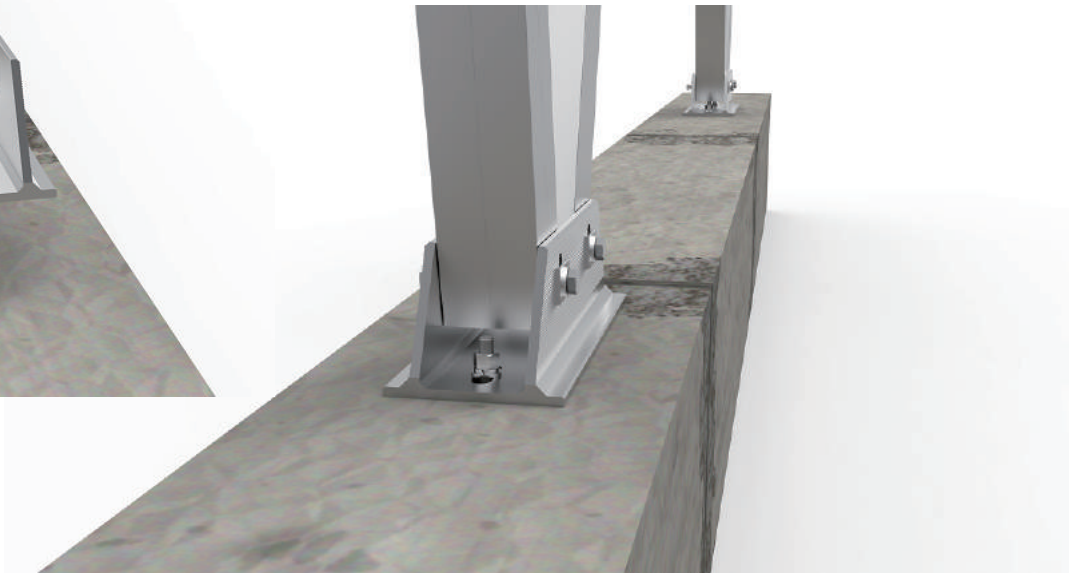

Long slot in the base enable adjustment

Make sure all supports are aligned.

6. Beam connection (single length can skip)

Beams can extend length, 400mm square tube as joiner using 4xM12*130mm bolts, nuts.

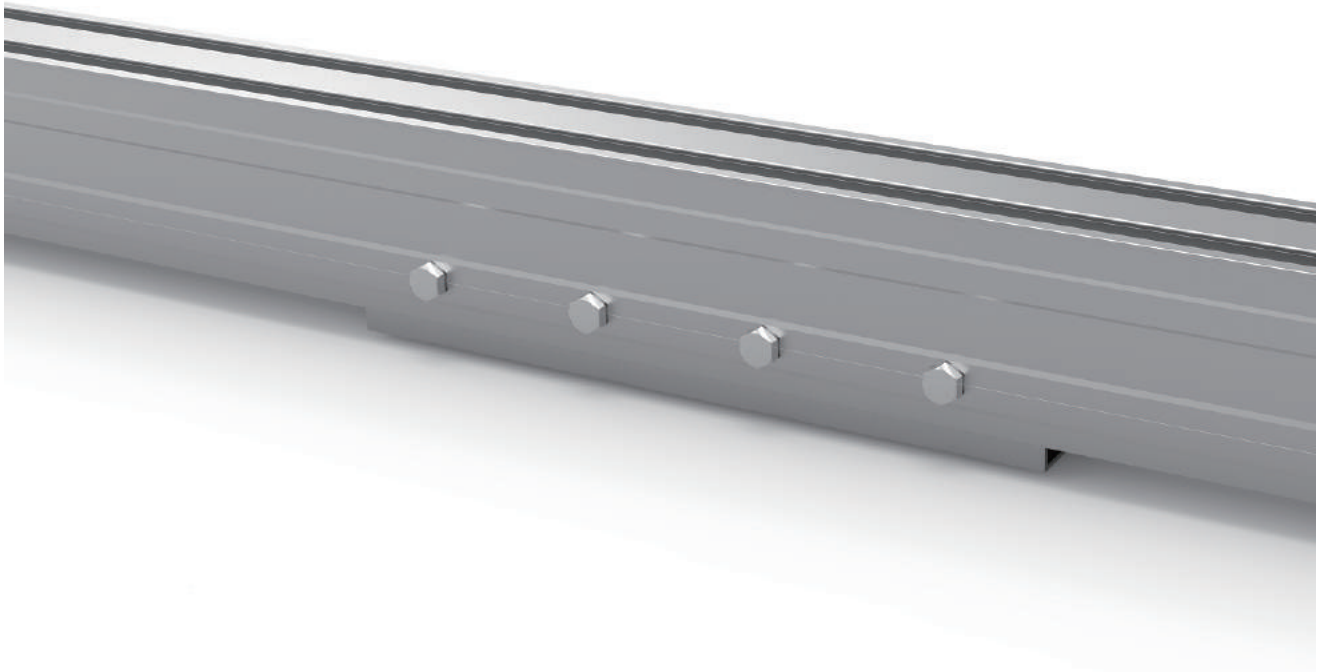

7. Rail installation

The rails are mounted as per the drawing of each project, and aligned at right angles.
Please ensure that the rails are installed with the correct cantilever.
Before installing, mark the position of the rails on the beam.
Position bottom channel of rail in lower rail clamp. Upper clamp may need to be adjusted in order to secure rail. One side with one rail clamp.
When each rail is adjusted in line, secure bolts.

Please note: To safeguard against possible tilting of this assembly, the lower side of rail must be mounted and fastened with two mounting clamps first.

• Rail connection (single length rail can skip this)

Extend rail length using rail joiner for a larger array. 8pcs for each side, total 16pcs 6.3*25mm self-drilling screws.

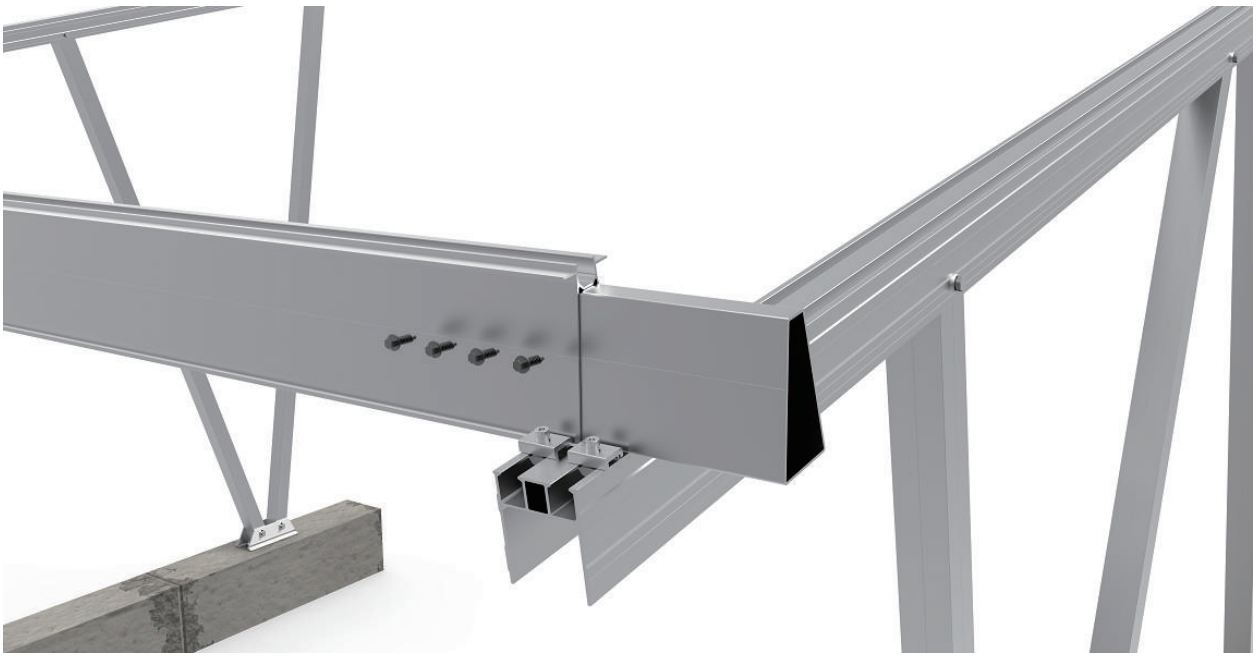

Joiner inside rail

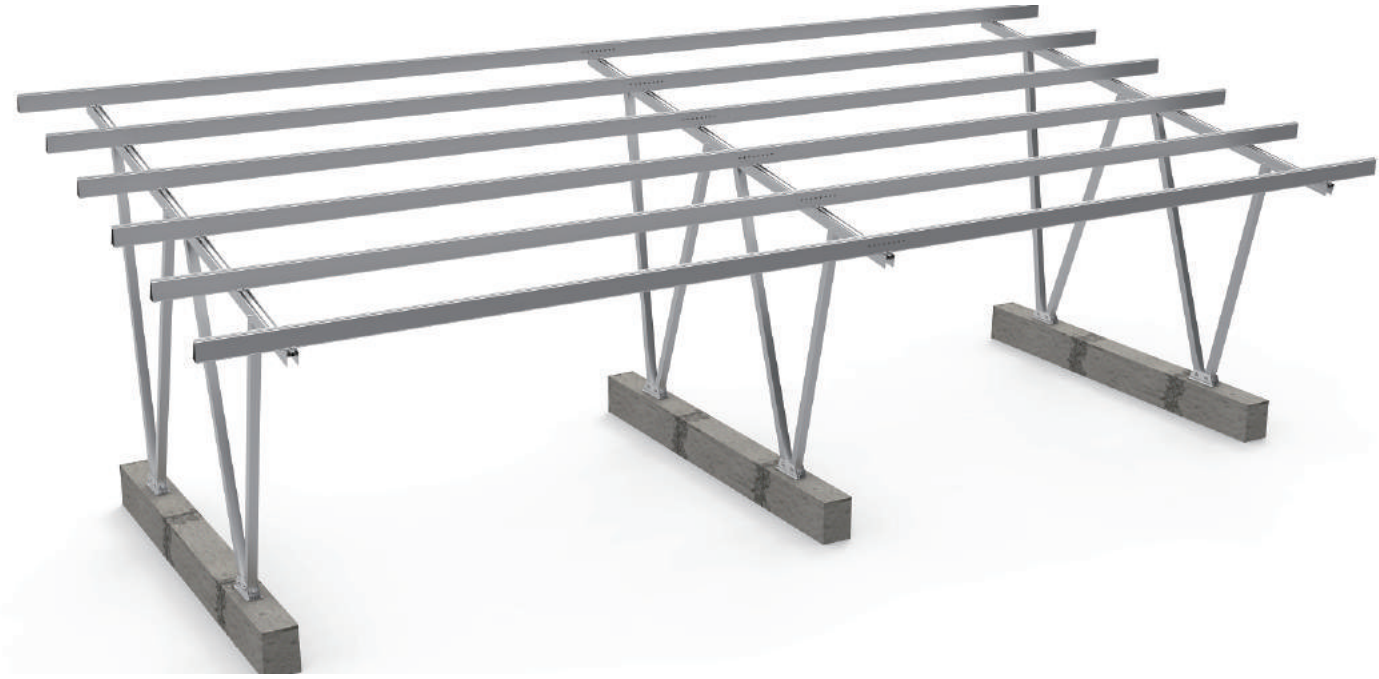

Repeat all rails and joiners

8. Module installation

Modules are attached to rails using pre-assembled mid clamp and end clamp.
Attach first panel from lower side is suggested.
Modules are installed according to module manufacturers' recommendations as well as manual provided.

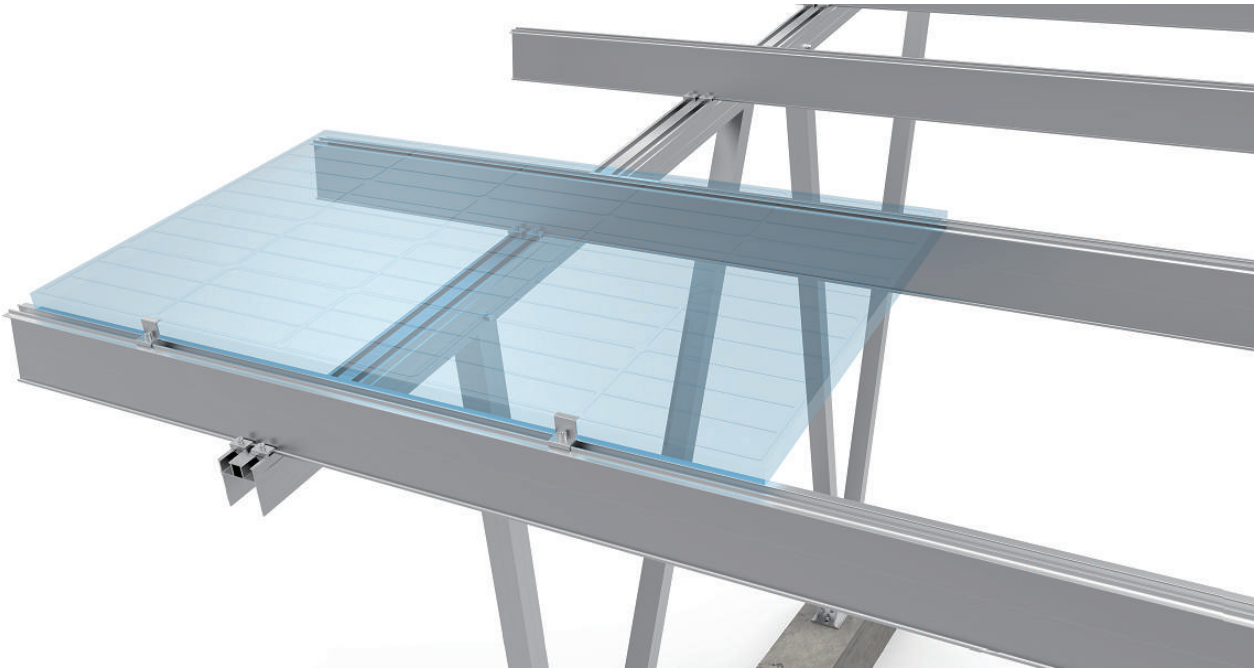

Please note: To easily adjust, please don't tighten all bolts until end of row.

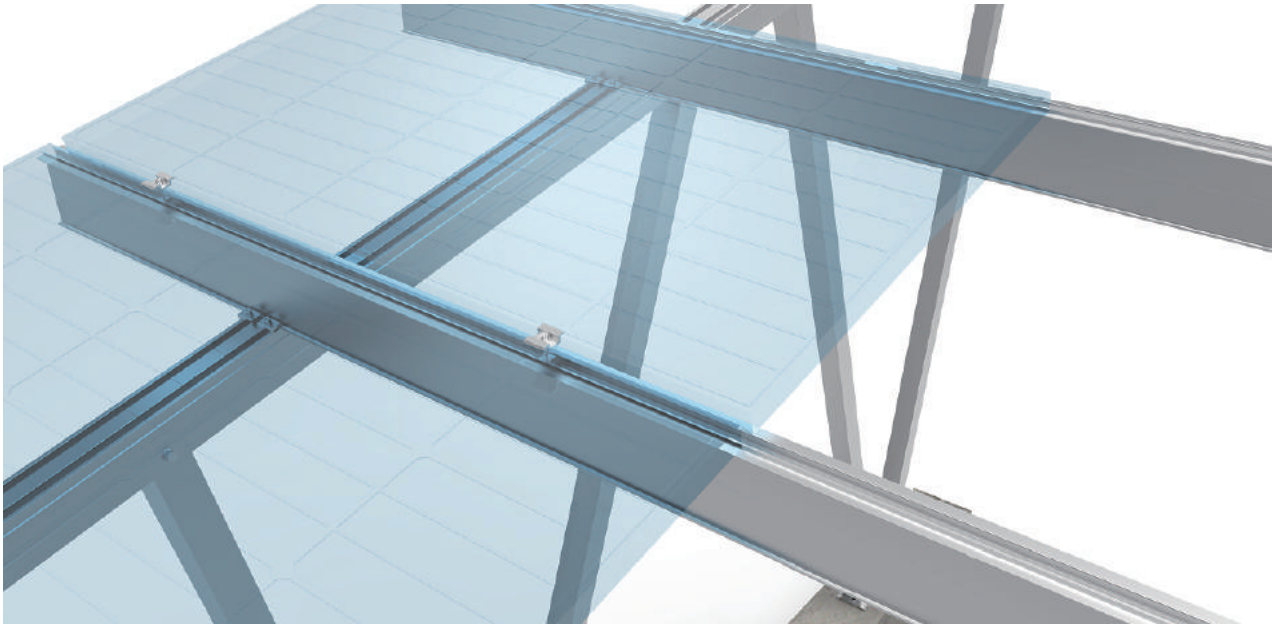

Position Mid clamp

Repeat all panels until finish, secure each clamp to specified torque
14NM for M8, 50NM for M12.

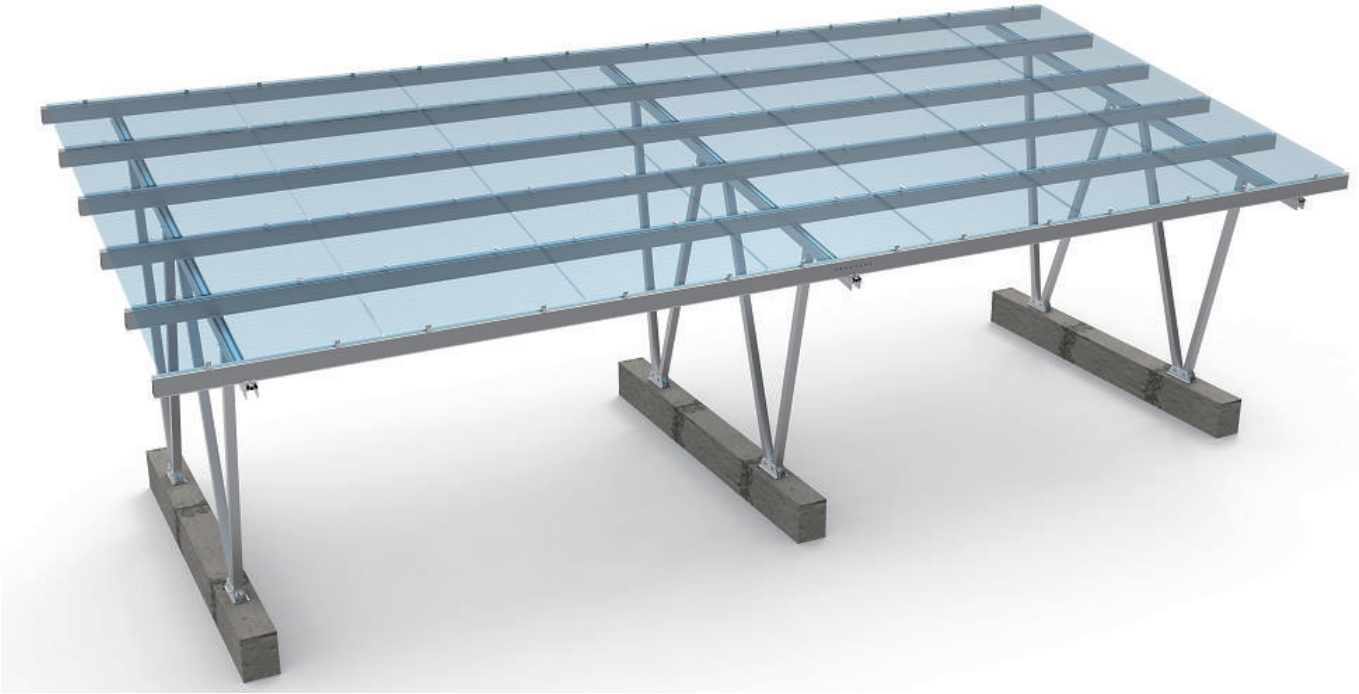

9. Water tight cover

For water tight purpose, glued the EPDM foam at gap between.

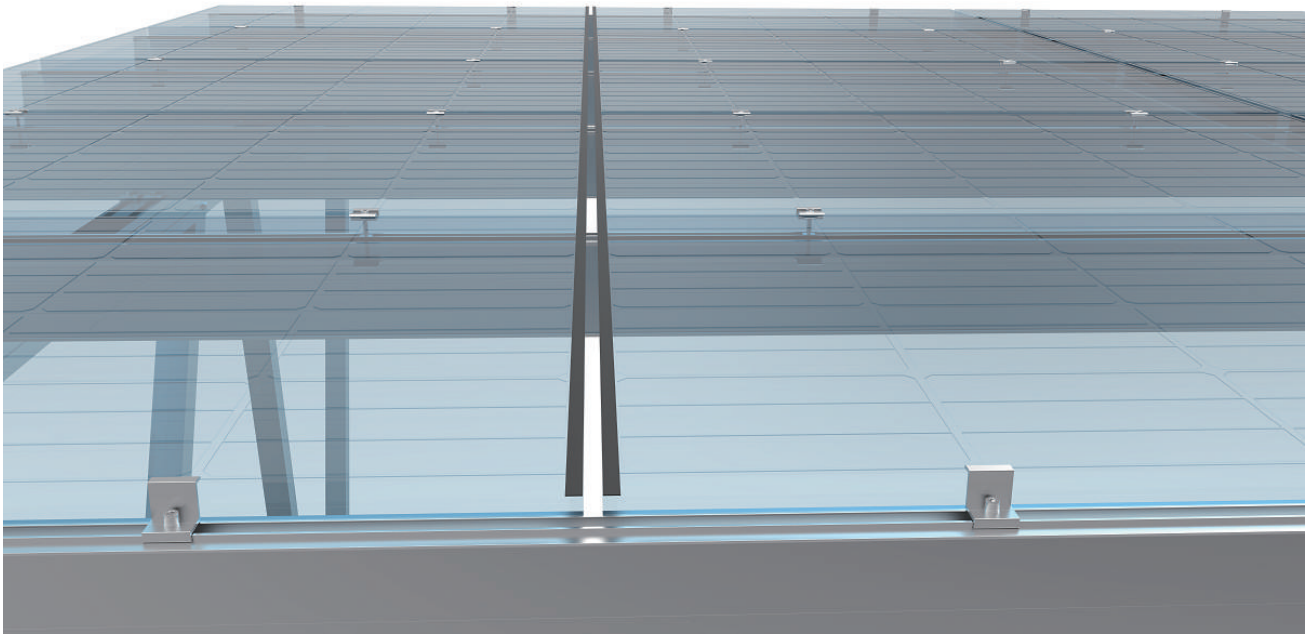

Attach long piece mid cover, secure with channel nuts.

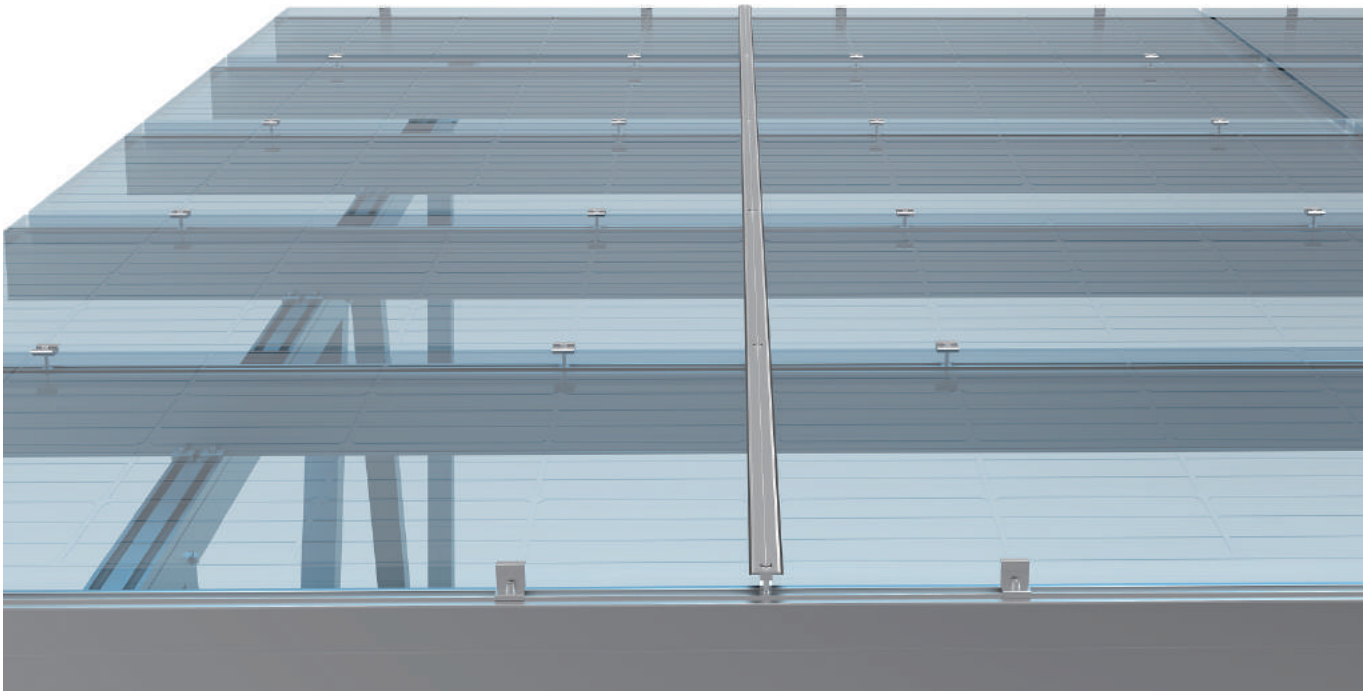

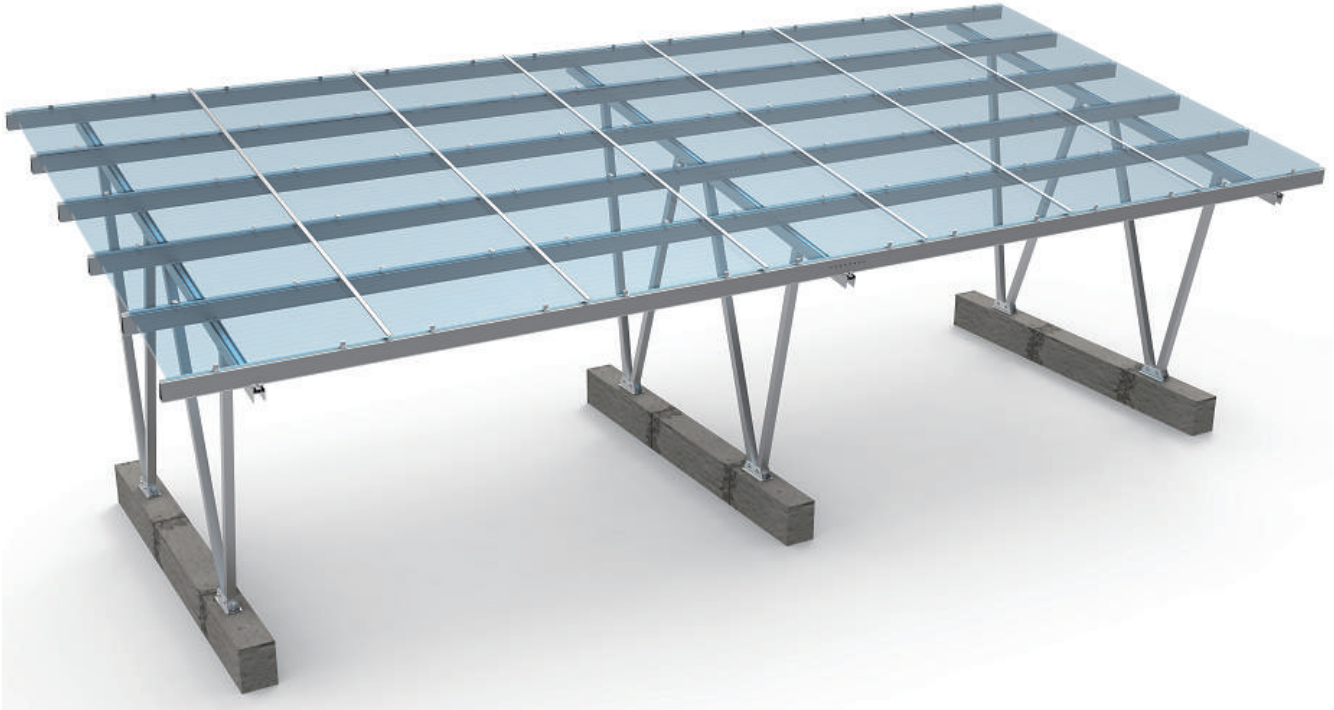

Repeat all mid covers, secure with channel nuts.

Material, Storage and Warranty

All materials are made from non-corrosive materials, anodized aluminum, hot-dip galvanized steel or stainless steel, with a limited product warranty of twelve (12) years. Warranty details please check with Solaracks team.

Make sure to install system within several days of receipt of components. Storage of components in a damp or wet environment can lead to white rust on galvanized parts as well as other damage on other protective coatings which can lead to accelerated corrosion of components, and void the warranty. Galvanization is especially prone to white rust when components are still bundled because the zinc coating requires airflow over its surface to establish its protective patina, otherwise water can cause corrosion of the zinc and it has no protection against it in enclosed spaces, such as those between parts that are bundled.

Maintenance

Proper preventative maintenance must be conducted or warranty may be voided.
Anodized 6005-T5 aluminium is largely maintenance free. Only in highly polluted or marine conditions is rinsing with clean water required, during scheduled panel cleaning.
Hot-dip galvanized steel parts, installer must annually monitor for any surface rust that may occur over time due to scraping of the components or for any other reason. While the extensive galvanizing protection should minimize any such rusting, it is essential that preventative maintenance be performed annually to include:

•Identifying any rust areas
•Wire brush the rust area to remove all rust
•Coat the area with 70%+ zinc rich or equivalent field life paint

This step is not required if rust is limited to edges which were cut during fabrication
After extreme wind turbulence (in excess of 80% of design wind speed), and on an annual basis, an inspection must be done for mechanical movement (which could also be due to any reason including thermal expansion and contraction). Any mechanical movement must be rectified. Torque settings must be checked for all hardware. All clamps shall be checked to make sure there is no gap between the side of the clamps and modules. It is estimated that two qualified persons should be able to properly inspect and maintain racking for approximately 1,000 panels per day.
Maintenance should only be performed by qualified personnel.

Notice for Stainless Steel Fasteners Install

Different from carbon steel, stainless steel has good ductility, which may result in deadlock if improperly used. Following tips for deadlock prevention:
Reducing friction factor:
• Make sure the screw thread surface is clean(no dust or sand, no sundries, etc.).
• Liquid wax or lubricant(butter, 40#engine oil, etc.) on surface while installing is recommended.
Operating correctly:
• Must be perpendicular to the axis of the screw thread when screwing, and do not incline.
• In the process of tightening, the strength need to be balanced, tightening torque shall not exceed the prescribed safety torque value.

• Choose torque wrench or socket wrench as far as possible, avoid using adjustable wrench or electric wrench.
• Do not use it when the temperature is high; do not use it with high speed spin, avoiding to be locked by rapid rise of temperature (Such as electric wrench, etc)